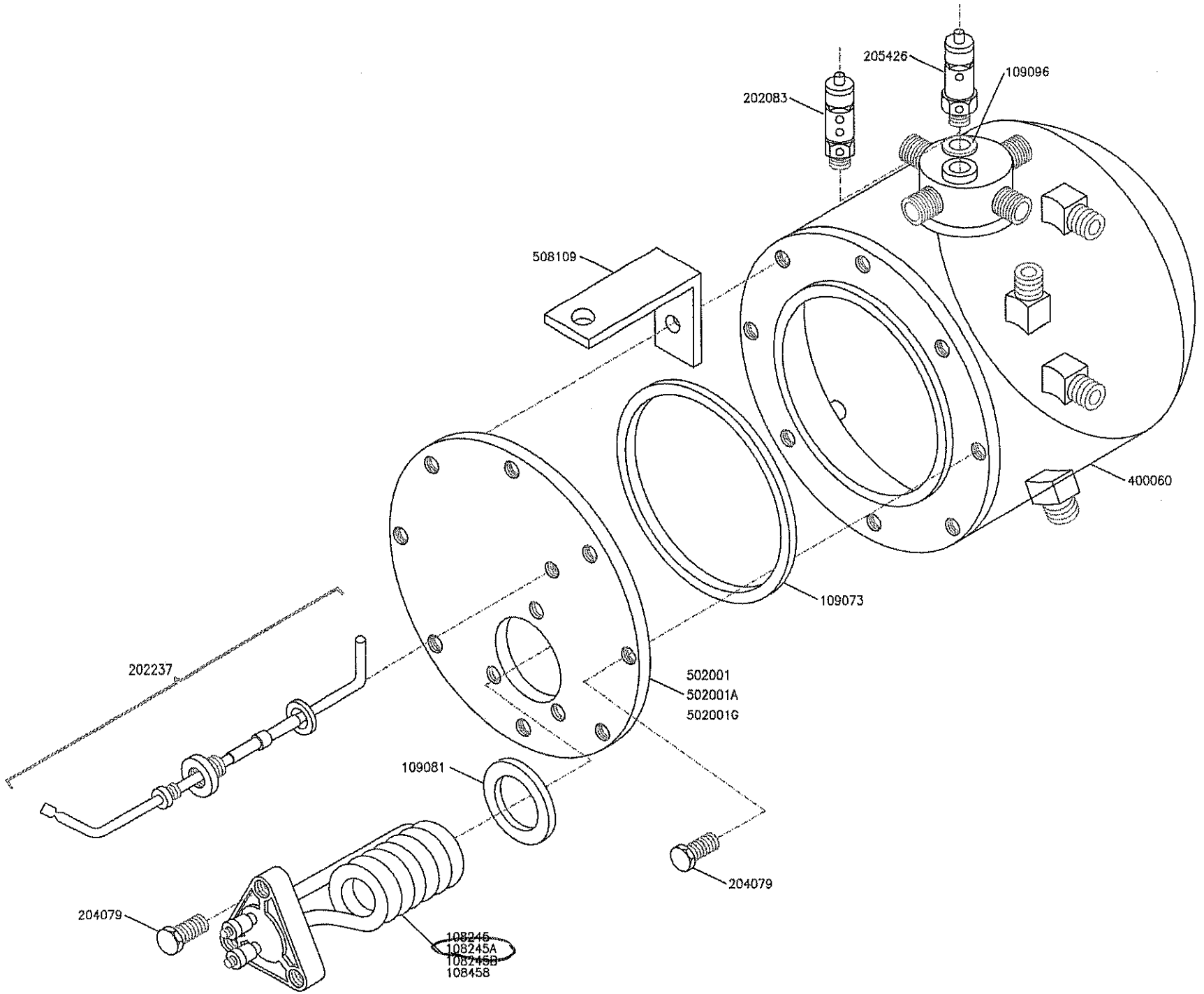
205426
109096
202083
508109
400060
109073
502001
502001A
502001G
202237
109081
204079
204079
108245
108245A
108245B
108458

CODICE	DESCRIZIONE	DESCRIPTION
108245	Resistenza 1750W 230 V	Heat element 1750W 230 V
108245A	Resistenza 1750W 110 V FOR Practical	Heat element 1750W 110 V
108245B	Resistenza 1500W 240 V	Heat element 1500W 240 V
108458	Resistenza 1500W 230 V TÜV	Heat element 1500W 230 V TÜV
109073	Guarnizione coperchio caldaia 85	Seal -boiler cover 85
109081	Guarnizione resistenza flangia	Gasket - heating element with flange
109096	Rondella rame per valvola sicurezza	Copper washer - security valve
202083	Valvola sicurezza caldaia TÜV	Boiler security valve TÜV
202237	Sonda autolivello	Autofill probe
204079	Vite inox TE 10x25	Screw - stainless steel TE10x25
205426	Valvola sicurezza caldaia	Security valve - boiler
400060	Corpo caldaia 85-Practical	Boiler body 85-Practical
502001	Coperchio caldaia	Boiler cover
502001A	Coperchio caldaia Practical 12 AUT./16M	Boiler cover Practical 12 AUT./16M
502001G	Coperchio caldaia Practical ETL	Boiler cover Practical ETL
508109	Supporto pressostato	Pressure regulator support